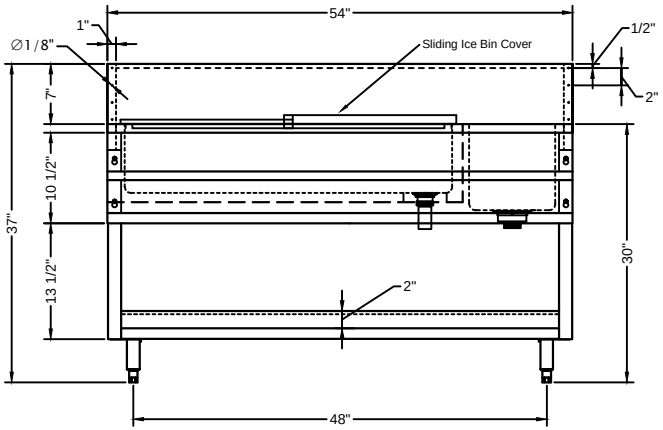

FRONT ELEVATION

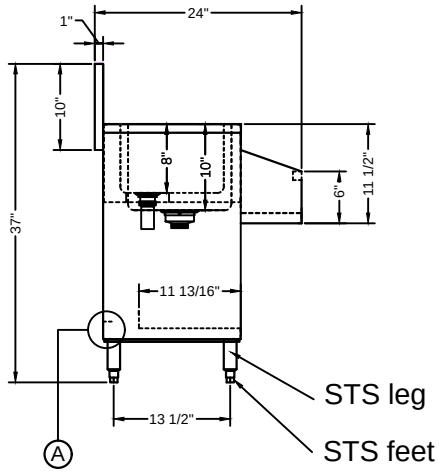

SEE DETAIL "A"

SIDE VIEW

- 18 GA. 304 stainless steel construction.
- STS Leg and STS feet.
- Drain Basket Included.

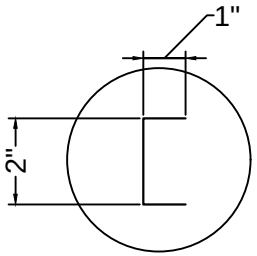

DETAIL "A"

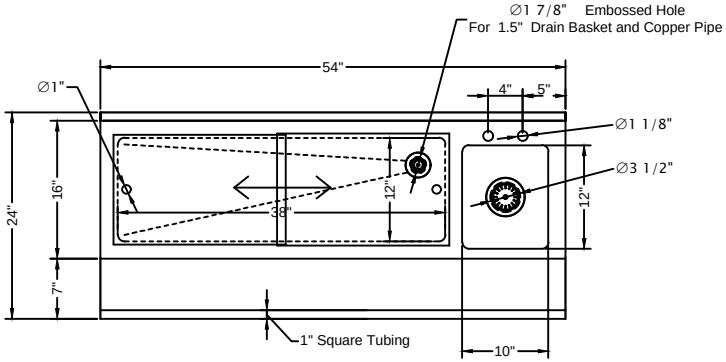

PLAN VIEW

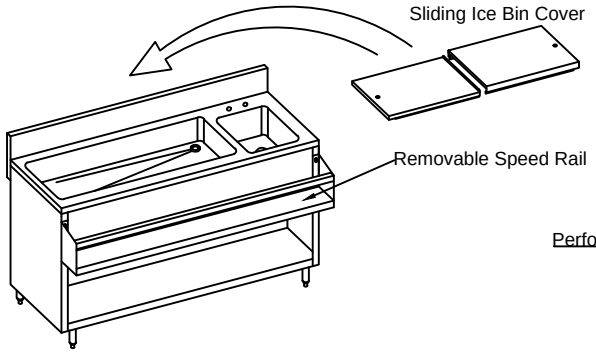

ISOMETRIC

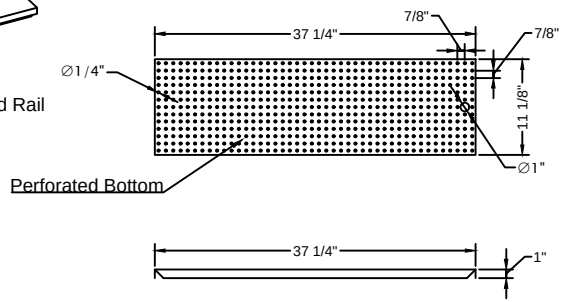

DRAWIN FOR :	MAT.	TOP : 18GA. 304 S/S.	DATE	REVISIONS	Tarrison Products Ltd.
		BASE :			
REF. NO :	REQ'D/ITEM :				
ITEM NAME : Cocktail Mix Unit with Cover	DATE : May/ 28/ 2021				
PROD . NO. : TA-CMU54SCR	BY :				
SCALE: 1/2" =1'-0"	CHECKED BY :				